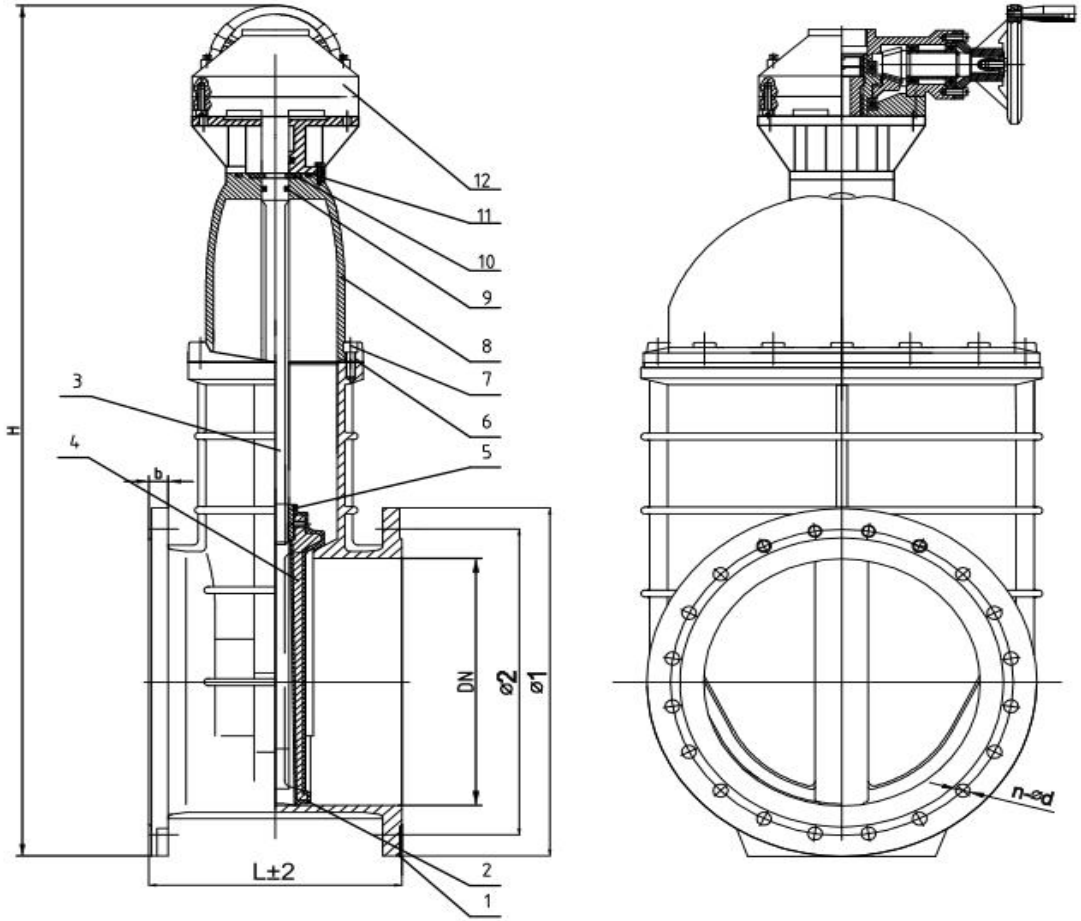

STANDARD:

1. Design code:DIN3352
2. Inspection&test:DIN3230
3. End standard: DIN2533 PN10/PN16
4. Face to face:DIN3202 F4/F5

ITEM	NAME	MATERIAL
1	body	GGG50
2	seat	EPDM
3	stem	SS410
4	disc	GGG50
5	wedge nut	Brass
6	bonnet gasket	EPDM
7	nut	SS
8	bonnet	GGG50
9	o ring	EPDM
10	thrust washer	Brass
11	sealing ring	EPDM
12	bevel gear	Componet

RESILIENT GATE VALVE DIN3352 F4/F5

SIZE	L		H	Φ1	Φ2	Φ3	b	n-Φd	f
	F4	F5							
DN350	290	550	1100	520/505	470/460	429	26	16-φ28/16-φ23	4
DN400	310	600	1180	580/565	525/515	480	28	16-φ31/16-φ28	4
DN500	350	700	1330	715/670	650/620	609/582	32	20-φ34/20-φ28	4
DN600	390	800	1950	840/780	770/725	720/682	36/30	20-φ37/20-φ31	4
DN700	430	900	2400	910/895	840	794	40/32	24-φ37/24-φ31	5
DN800	470	1000	2650	1025/1015	950	901	43/35	24-φ40/24-φ34	5
DN900	510	1100	2700	1125/1115	1050	1001	46/37	28-φ40/28-φ34	5
DN1000	550	1200	3050	1255/1230	1170/1160	1112	50/40	28-φ43/28-φ37	5
DN1200	630	1400	3400	1485/1455	1390/1380	1328	57/45	32-φ49/32-φ40	5

CONFORM CU ORIGINALUL

SC PETROUZINEX SRL PIATRA NEAMT ROMANIA

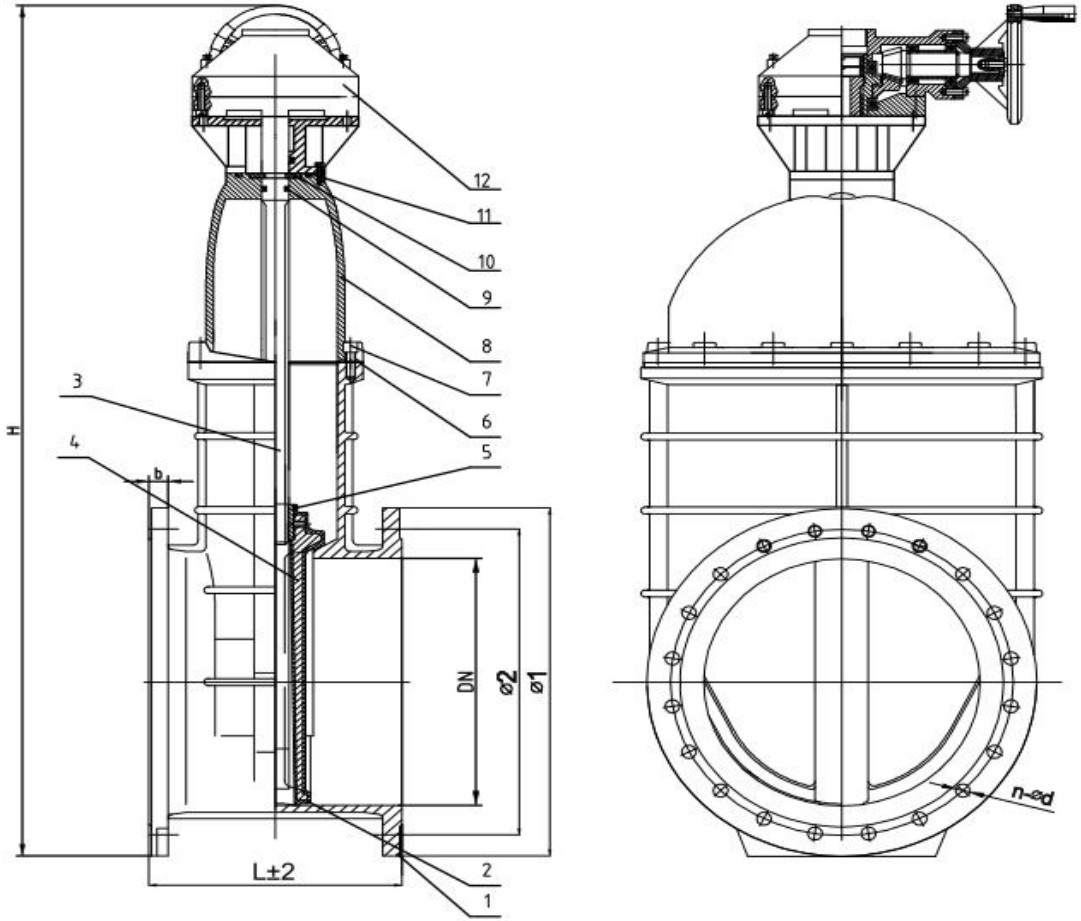

STANDARD:

1. Design:DIN3352
2. Inspectie&teste:DIN3230
3. Flanse: DIN2533 PN10/PN16
4. Lungime intre flanse:DIN3202 F4/F5

ITEM	DENUMIRE	MATERIAL
1	corp	GGG50
2	scaun	EPDM
3	tija	SS410
4	pana	GGG50
5	piulita pana	Alama
6	garnitura capac	EPDM
7	piulita	SS
8	capac	GGG50
9	o ring	EPDM
10	saiba de presiune	Alama
11	inel etansare	EPDM
12	angrenaj conic	Componeta

ROBINET CU SERTAR CAUCIUCAT DIN3352 F4/F5

DN	L		H	Φ1	Φ2	Φ3	b	n-Φd	f
	F4	F5							
DN350	290	550	1100	520/505	470/460	429	26	16-φ28/16-φ23	4
DN400	310	600	1180	580/565	525/515	480	28	16-φ31/16-φ28	4
DN500	350	700	1330	715/670	650/620	609/582	32	20-φ34/20-φ28	4
DN600	390	800	1950	840/780	770/725	720/682	36/30	20-φ37/20-φ31	4
DN700	430	900	2400	910/895	840	794	40/32	24-φ37/24-φ31	5
DN800	470	1000	2650	1025/1015	950	901	43/35	24-φ40/24-φ34	5
DN900	510	1100	2700	1125/1115	1050	1001	46/37	28-φ40/28-φ34	5
DN1000	550	1200	3050	1255/1230	1170/1160	1112	50/40	28-φ43/28-φ37	5
DN1200	630	1400	3400	1485/1455	1390/1380	1328	57/45	32-φ49/32-φ40	5

SC PETROUZINEX SRL
PIATRA NEAMT
ROMANIA